

MAINTENANCE HANDBOOK

Order N° ……..
Type of hoist : ……..
Serial number : ……..
Capacity : ……..
Date of manufacture : ……..

SWF KRANTECHNIK

Hoist maintenance should be done in accordance with the Owner's Manual of the hoist. The details and maximum allowed values can be found in the hoist Owner's manual. Hoists should be serviced minimum once per year by a qualified technician

Hook opening measurement (a2)

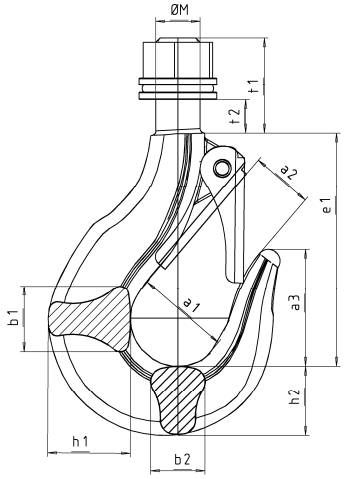

Chain wear measurement (11 x t)

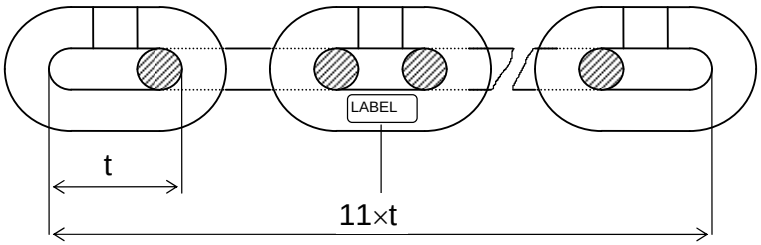

Date		**Hour counter**		
General condition of hoist	Safety latch condition	Chain cleanness and lubrication	Function of upper and lower limit switch	PBS câble condition
Lower Hook Opening	Upper Hook Opening	Chain measurement (11xt)	Clutch setting value	Brake air gap
Remarks and other checks				
Name of inspector		Visa		

Date		**Hour counter**		
General condition of hoist	Safety latch condition	Chain cleanness and lubrication	Function of upper and lower limit switch	PBS câble condition
Lower Hook Opening	Upper Hook Opening	Chain measurement (11xt)	Clutch setting value	Brake air gap
Remarks and other checks				
Name of inspector		Visa		

Date		**Hour counter**		
General condition of hoist	Safety latch condition	Chain cleanness and lubrication	Function of upper and lower limit switch	PBS câble condition
Lower Hook Opening	Upper Hook Opening	Chain measurement (11xt)	Clutch setting value	Brake air gap
Remarks and other checks				
Name of inspector		Visa		

Date		**Hour counter**		
General condition of hoist	Safety latch condition	Chain cleanness and lubrication	Function of upper and lower limit switch	PBS câble condition
Lower Hook Opening	Upper Hook Opening	Chain measurement (11xt)	Clutch setting value	Brake air gap
Remarks and other checks				
Name of inspector		Visa		

Date		**Hour counter**		
General condition of hoist	Safety latch condition	Chain cleanness and lubrication	Function of upper and lower limit switch	PBS câble condition
Lower Hook Opening	Upper Hook Opening	Chain measurement (11xt)	Clutch setting value	Brake air gap
Remarks and other checks				
Name of inspector		Visa		

Date		**Hour counter**		
General condition of hoist	Safety latch condition	Chain cleanness and lubrication	Function of upper and lower limit switch	PBS câble condition
Lower Hook Opening	Upper Hook Opening	Chain measurement (11xt)	Clutch setting value	Brake air gap
Remarks and other checks				
Name of inspector		Visa		

Date		**Hour counter**		
General condition of hoist	Safety latch condition	Chain cleanness and lubrication	Function of upper and lower limit switch	PBS câble condition
Lower Hook Opening	Upper Hook Opening	Chain measurement (11xt)	Clutch setting value	Brake air gap
Remarks and other checks				
Name of inspector		Visa		

Date		**Hour counter**		
General condition of hoist	Safety latch condition	Chain cleanness and lubrication	Function of upper and lower limit switch	PBS câble condition
Lower Hook Opening	Upper Hook Opening	Chain measurement (11xt)	Clutch setting value	Brake air gap
Remarks and other checks				
Name of inspector		Visa		

Date		**Hour counter**		
General condition of hoist	Safety latch condition	Chain cleanness and lubrication	Function of upper and lower limit switch	PBS câble condition
Lower Hook Opening	Upper Hook Opening	Chain measurement (11xt)	Clutch setting value	Brake air gap
Remarks and other checks				
Name of inspector		Visa		

Date		**Hour counter**		
General condition of hoist	Safety latch condition	Chain cleanness and lubrication	Function of upper and lower limit switch	PBS câble condition
Lower Hook Opening	Upper Hook Opening	Chain measurement (11xt)	Clutch setting value	Brake air gap
Remarks and other checks				
Name of inspector		Visa		

Date		**Hour counter**		
General condition of hoist	Safety latch condition	Chain cleanness and lubrication	Function of upper and lower limit switch	PBS câble condition
Lower Hook Opening	Upper Hook Opening	Chain measurement (11xt)	Clutch setting value	Brake air gap
Remarks and other checks				
Name of inspector		Visa		

Date		**Hour counter**		
General condition of hoist	Safety latch condition	Chain cleanness and lubrication	Function of upper and lower limit switch	PBS câble condition
Lower Hook Opening	Upper Hook Opening	Chain measurement (11xt)	Clutch setting value	Brake air gap
Remarks and other checks				
Name of inspector		Visa		


SWF
KRANTECHNIK